bürkert
FLUID CONTROL SYSTEMS

2/2 and 3/2-way flipper solenoid valve for analytical applications

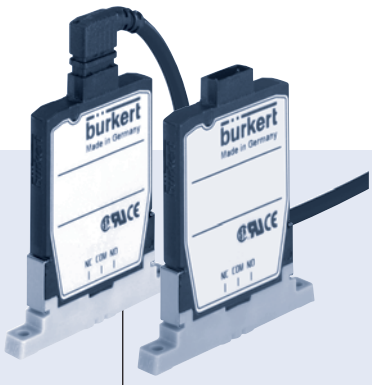

- Only 4.5mm wide
- Medium isolation, for aggressive fluids
- Direct-acting
- Vacuum up to 7 bar
- Short response times

Type 6650 can be combined with…

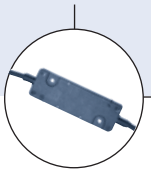

Type 6650
Hit and hold electronic

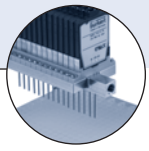

Type 6650
Multiple manifolds

With a width of only 4.5mm, Type 6650 sets a new standard in medium isolation miniature solenoid valves. The optimized design enables reproducible and precise dosing, good rinsing capability and is suitable for the application of aggressive chemicals owing to the high quality ot the materials used. With the two nominal sizes of 0.4 and 0.8mm, as well as the selection between 2/2-way and 3/2-way function, it is ideal for applications where the highest fluid performances are required in the smallest space. Type 6650 opens up new possibilities, owing to the 4.5mm station width, in particular in connection with dosing in 384-well micro-titerplates. Based on the well-known flipper principle (Type 0330) it is tied to the success history of the legendary Type 127.

Circuit function A

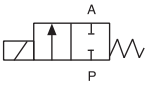

2/2-way valve, normally closed

Circuit function T

3/2-way valve, universal function

Technical data	
Orifice	DN 0.4 and 0.8 mm
Body material	PEEK
Seal material	FFKM (Simriz)
Medium	Resistant to neutral and aggressive fluids and gases; see Bürkert resistance table
Medium temperature	+15 .. +50°C
Ambient temperature	+10 .. +50°C
Internal volume	approx. 30 µl
Port connection	Flange
Electrical connection	Plug with flying leads and integrated power reduction electronic or plug with flying leads
Operating voltages	24V
Voltage tolerance	±10%
Nominal power	5.7 W inrush power (for 5ms) 0.7 W holding power
Duty cycle	100% continuous operation with power reduction electronic
Installation	As required; with side by side connection standard polarity is adhered to
Protection class	IP65
Switching frequency	Max. 80Hz[1)]
Response times	<5ms (acc. to ISO 12238)

[1)] In continuous operation with Bürkert hit and hold electronic
without cooling plate; max. 15Hz,
with cooling plate; max. 40Hz.
For higher frequency see operating instructions for max. operation

DTS 1000105258 EN Version: G Status: RL (released | freigegeben | validé) printed: 08.07.2009

bürkert

Ordering chart

Circuit function	Orifice [mm]	Kv value water [m³/h] [1]	Pressure range [bar] [2]	Max. pressure difference [bar]	Voltage [V]	Nominal power [W] (Inrush-/ nominal holding power)	Item no.
A 2/2-way valve NC 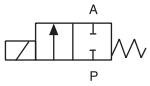	0.4	0.004	Vac.-7	7	24	5.7/0.7	182 284
T 3/2-way valve universal function 	0.8	0.014	Vac.-1	1	24	5.7/0.7	189 292

[1] Measured at +20 °C, 1 bar pressure at valve inlet and free outlet.
[2] Measured as overpressure to the atmospheric pressure.

Mounting screws: VA 2x M2x8

Dimensions [mm]

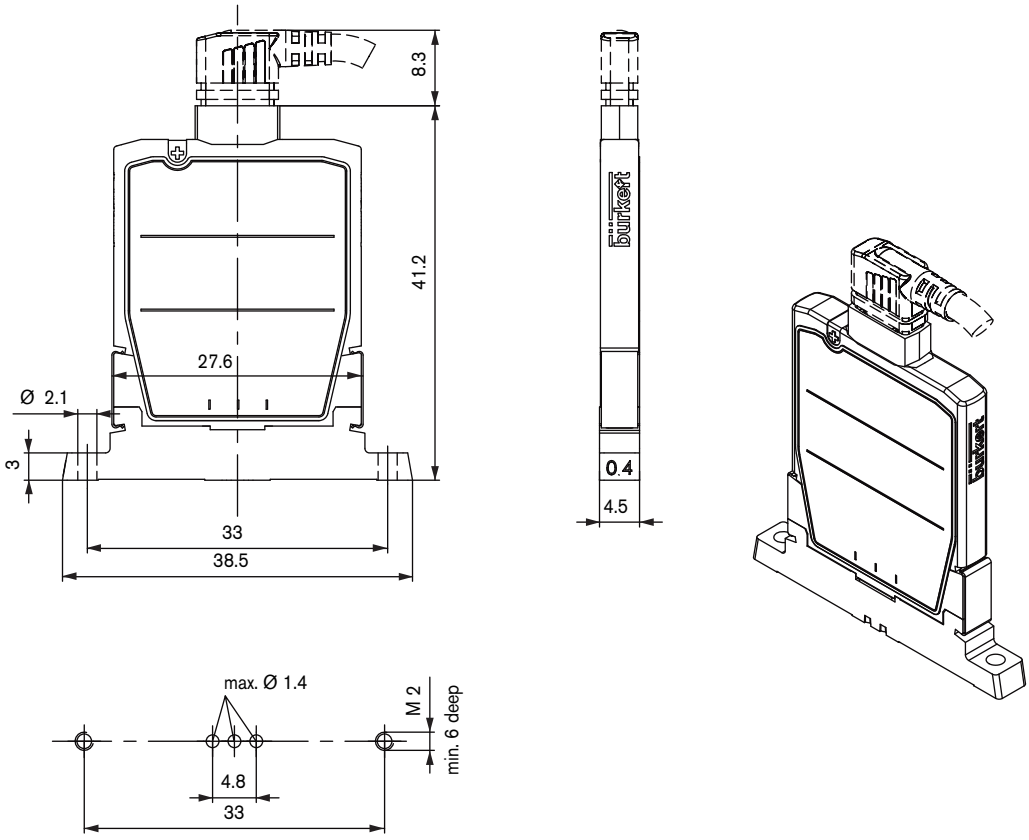

Flange interface for 3/2-way connection.
For 2/2-way version the middle port is inapplicable

Ordering chart for accessories

Cable with sleeve for Type 6650

Description	Item no.
With integrated hit and hold electronic, 24V/DC, 500mm long	670 178
Single cable, 500mm long[1)]	670 164

[1)] The valve must be activated with an inrush voltage of 24V/DC, after 5ms the voltage has to be reduced to the holding level of 8.4 V/DC or switched over to PWM signal (20kHz, duty cycle 33%). In case the Bürkert hit & hold electronic is not used, there has to be a reduction of the nominal voltage to the holding level by a local control unit. If no power reduction is applied, the acceptable duty cycle is reduced (see operating manual for details)

Dimensions for accessories [mm]